PCM-9362

Intel® Atom™ N450/ D510 3.5" SBC, LVDS, VGA, 2 GbE, Mini PCIe, 4 COM , MIO-160 Expansion

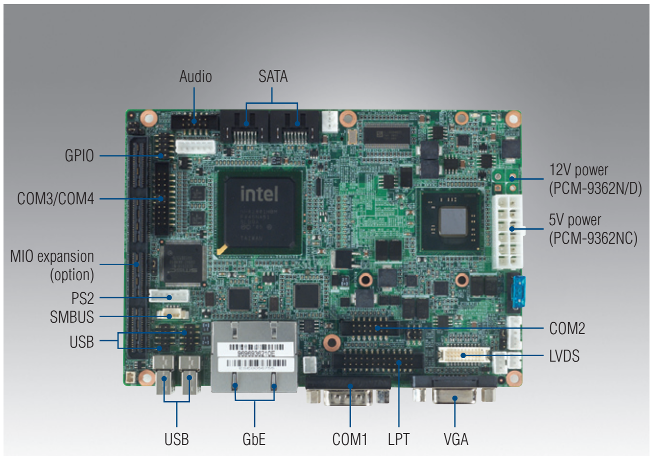

VxWorks® Windows Embedded SUSIAccess CE FCC QNX

Features

- Embedded Intel® Atom™ processor N450 Single Core/ D510 Dual Core 1.66 GHz + ICH8M
- Intel Gen 3.5 DX9, MPEG2 Decode in HW, multiple display: VGA, 18-bit LVDS
- Supports 12 V input power for PCM-9362N/D, 5V input power for PCM-9362NC
- Supports 2 Intel Giga Ethernet ports; Rich I/O interfaces with 4 COM, 2 SATA, 6 USB and GPIO
- Supports embedded software APIs and utilities

Software APIs: GPIO, H/W Monitor, Brightness, Watchdog, Backlight On/Off, SMBus, CPU Speed, System Throttling

Utilities: BIOS flash, Monitoring, Flash Lock, Embedded Security ID

Specifications

Processor System	CPU	Intel Atom Processor, N450 Single Core 1.66 GHz Intel Atom Processor, D510 Dual Core 1.66 GHz
	Front Side Bus	667 MHz
	Frequency	1.66 GHz
	L2 Cache	512 KB/1 MB
	System Chipset	Intel N450/D510 + ICH8M
	BIOS	AMI 16 Mbit Flash BIOS
Memory	Technology	DDR2 667 MHz
	Max. Capacity	2 GB
	Socket	1 x 200-pin SODIMM
Display	Chipset	Intel Atom N450/D510 1.66 GHz
	VRAM	Optimized Shared Memory Architecture up to 224 MB system memory
	Graphics Engine	Intel Gen 3.5 DX9, MPEG2 Decode in HW, Embedded Gen3.5+ GFX Core
	LVDS	LVDS: Single channel 18-bit LVDS up to WXGA 1366 x 768
	VGA	Intel Atom N450 Single Core up to 1400 x 1050 (SXGA) Intel Atom D510 Dual Core up to 2048 x 1536
	Dual Display	VGA+LVDS
Ethernet	Speed	10/100/1000 Mbps (Supports Wake on LAN)
	Controller	GbE1 Intel 82567V, GbE2 Intel 82583V
	Connector	RJ-45 on GbE1, GbE2
Audio	Chipset	Realtek ALC888, High Definition Audio(HD),Line-in, Line out, Mic-in
WatchDog Timer		Output System reset, Programmable counter from 1 ~ 255 minutes/ seconds
Storage	CompactFlash	Supports CompactFlash Card TYPE I/II (Primary Master IDE Channel)
	SATA	2 x SATA II (Max. Data Transfer Rate 300 MB/s)
Rear I/O	Serial	1 (COM1 supports RS-232) (ESD protection for RS-232: Air gap ±15kV, Contact ±8kV)
	Ethernet	2 (10/100/1000 Mbps)
	VGA	1
	USB	2
Internal I/O	USB	4 x USB 2.0 ports
	Serial	3 x COM ports (ESD protection for RS-232: Air gap ±15kV, Contact ±8kV) COM3/COM4 supports RS-232 COM2 supports RS-232/422/485 (Supports RS-485 auto flow control)
	Parallel (LPT)	1
	PS/2 KB/Mouse	1
	GPIO	8-bit GPIO
	SMbus	1
Expansion	Mini PCI Express	1
	MIO 160	1 (Supported on PCM-9362NF/NCF/DF)
Power	Power Type	AT/ATX
	Power Supply Voltage	For NC/NCF sku AT: 5V±5% (12V is optional for LCD inverter and add-on card) ATX: 5V±5%, 5 Vsb±5% (12V is optional for LCD inverter and add on card) For D/N/DF/NF sku AT: 12V±10% ATX: 12V±10%, 5 Vsb±5%
	Power Consumption (Typical)	PCM-9362NC-S6A1E: 5 V : 2.31 A; PCM-9362N-S6A1E: 12 V : 0.87 A; PCM-9362D-S6A1E: 12 V : 0.91 A
	Power Consumption (Max, test in HCT)	PCM-9362NC-S6A1E: 5 V : 2.36 A; PCM-9362N-S6A1E: 12 V : 1.01 A; PCM-9362D-S6A1E: 12 V : 1.17 A
	Power Management	APM, ACPI
	Battery	Lithium 3 V/210 mAH
Environment	Operational	0 ~ 60° C (32 ~ 140° F) (Operating humidity: 40° C @ 95% RH non-condensing)
	Non-Operational	-40° C ~ 85° C and 60° C @ 95% RH non-condensing
Physical Characteristics	Dimensions (L x W)	146 x 102 mm (5.7" x 4")
	Weight	0.85 kg (1.87 lb), weight of total package
	Total Height	30.5mm for PCM-9362N/NF/NC/NCF/NZ/NZ2 34.5mm for PCM-9362D/DF

All product specifications are subject to change without notice
Last updated : 9-Nov-2011

Board Diagram

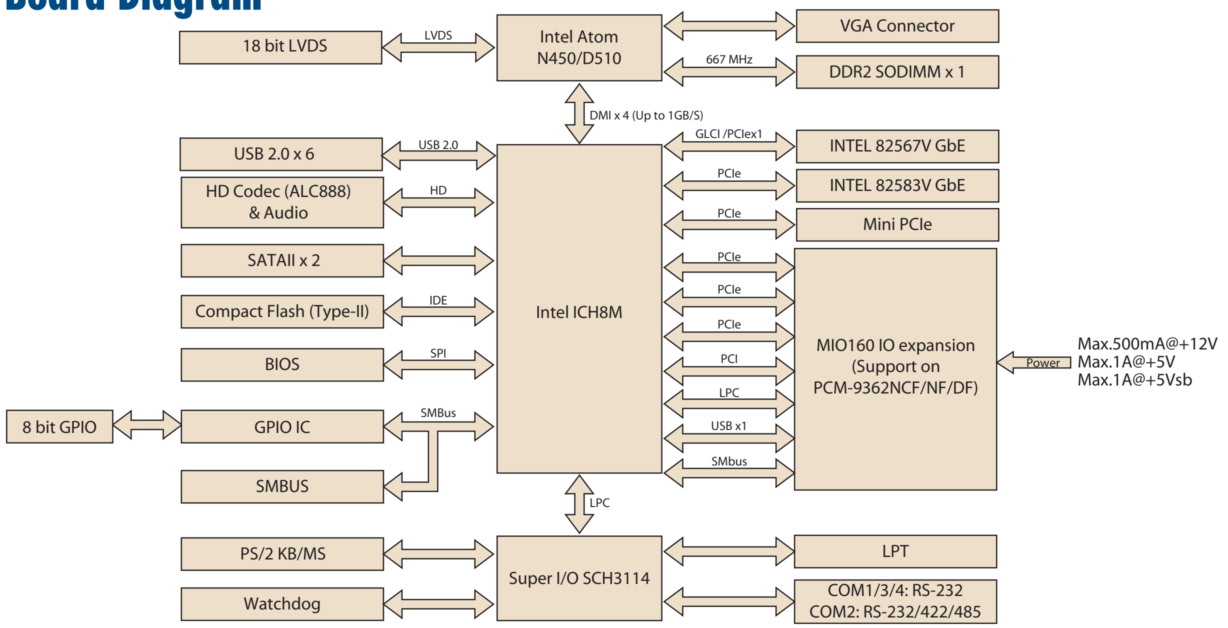

Ordering Information

Model	CPU	Memory	Power Input	MIO-160 Expansion	VGA	LVDS	GbE1	GbE2	Audio	SATAII	USB 2.0	Mini-PCIe	CF	LPT	RS-232	RS-232/ 422/485	Thermal Solution	Operating Temperature
PCM-9362NC-S6A1E	Atom N450	DDR2 SO-SIMM	5 V	-	1	1	1	1	HD	2	6	1	1	1	3	1	Passive	0 ~ 60° C
PCM-9362NCF-S6A1E	Atom N450	DDR2 SO-SIMM	5 V	Yes	1	1	1	1	HD	2	6	1	1	1	3	1	Passive	0 ~ 60° C
PCM-9362N-S6A1E	Atom N450	DDR2 SO-SIMM	12 V	-	1	1	1	1	HD	2	6	1	1	1	3	1	Passive	0 ~ 60° C
PCM-9362NF-S6A1E	Atom N450	DDR2 SO-SIMM	12 V	Yes	1	1	1	1	HD	2	6	1	1	1	3	1	Passive	0 ~ 60° C
PCM-9362D-S6A1E	Atom D510	DDR2 SO-SIMM	12 V	-	1	1	1	1	HD	2	6	1	1	1	3	1	Active	0 ~ 60° C
PCM-9362DF-S6A1E	Atom N450	DDR2 SO-SIMM	12 V	Yes	1	1	1	1	HD	2	6	1	1	1	3	1	Active	0 ~ 60° C
PCM-9362NZ-1GS6A1E	Atom N450	1GB bundle	12 V	-	1	1	1	1	HD	2	6	1	1	1	3	1	Passive	-20 ~ 80° C
PCM-9362NZ21GS6A1E	Atom N450	1GB bundle	12 V	-	1	1	1	1	HD	2	6	1	1	1	3	1	Passive	-40 ~ 85° C

Packing List

Part No.	Description	Quantity
	PCM-9362 SBC	
	Startup Manual	
	Utility CD	
9689000002	mini Jumper pack	1
1700000265	ATX power cable (PCM-9362NC series only)	1
1700006291	SATA cable 30cm	1
1703060191	PS/2 cable 19cm	1
1701140201	COM2 IDE D-SUB 20 cm cable	1
1703100121	USB 2 x 5P-2.0 12 cm W/BKT cable	2
1703100152	Audio cable 20cm	1
1700260250	LPT IDE 26P D-SUB 25 cm cable	1
1703150102	SATA 10 cm Power cable	1
1700001795	COM3/4 cable 19cm	1
1960050034N001	CPU N450 heatsink (75 x 62 19.9 mm) for PCM-9362N series	1
1960050035N001	CPU D510 cooler (75 x 62 x 24.4 mm) for PCM-9362D	1
1960024933S00B	ICH8M Heatsink for PCM-9362 series (38.1x33.6x7.5mm)	1

Rear I/O View

Optional Accessories

(MIO modules are supported by PCM-9362NCF/NF/DF version)

Part No.	Description
MIO-6250-00A1E	MIO-160 module w/ 3 10/100 Ethernet (RTL8139)
MIO-6260-00A1E	MIO-160 IO module w/2 COM, 4 USB
MIO-6260L-00A1E	MIO-160 IO module w/2 COM, 4 USB, 1 10/100 Ethernet
1700016161	AT Power cable, 2 x 6P to 3 x 4P 10 cm
1700016141	AT power cable, 2 x 6P to 2 10P 10 cm
1960047470N001	Heat spreader(97 x 75 18.5 mm)

Embedded OS/API

Embedded OS/API	Part No.	Description
Win XPE	2070009030	XPE WES2009 Luna Pier V4.0 ENG
	2070009031	XPE WES2009 Luna Pier V4.0 MUI24
WinCE	2070009693	CE 6.0 Pro PCM-9362 V1.3 ENG
WES 7	2070009835	Image WES7E V5.0 ENG
QNX		V6.5
Vxwork		V6.8
Linux		Ubuntu V10.04
Software API	205E362010	SUSI 3.0 SW API for PCM-9362 B: 20091117 XP

Value-Added Software Services

Software API: An interface that defines the ways by which an application program may request services from libraries and/or operating systems. Provides not only the underlying drivers required but also a rich set of user-friendly, intelligent and integrated interfaces, which speeds development, enhances security and offers add-on value for Advantech platforms. It plays the role of catalyst between developer and solution, and makes Advantech embedded platforms easier and simpler to adopt and operate with customer applications.

Software APIs

Control

GPIO

General Purpose Input/Output is a flexible parallel interface that allows a variety of custom connections. It allows users to monitor the level of signal input or set the output status to switch on/off a device. Our API also provides Programmable GPIO, which allows developers to dynamically set the GPIO input or output status.

SMBus

SMBus is the System Management Bus defined by Intel® Corporation in 1995. It is used in personal computers and servers for low-speed system management communications. The SMBus API allows a developer to interface a embedded system environment and transfer serial messages using the SMBus protocols, allowing multiple simultaneous device control.

I^2C

I^2C is a bi-directional two wire bus that was developed by Philips for use in their televisions in the 1980s.
The I^2C API allows a developer to interface with an embedded system environment and transfer serial messages using the I^2C protocols, allowing multiple simultaneous device control.

Monitor

Watchdog

A watchdog timer (WDT) is a device that performs a specific operation after a certain period of time if something goes wrong and the system does not recover on its own.
A watchdog timer can be programmed to perform a warm boot (restarting the system) after a certain number of seconds.

Hardware Monitor

The Hardware Monitor (HWM) API is a system health supervision API that inspects certain condition indexes, such as fan speed, temperature and voltage.

Hardware Control

The Hardware Control API allows developers to set the PWM (Pulse Width Modulation) value to adjust fan speed or other devices; it can also be used to adjust the LCD brightness.

Display

Brightness Control

The Brightness Control API allows a developer to interface with an embedded device to easily control brightness.

Backlight

The Backlight API allows a developer to control the backlight (screen) on/off in an embedded device.

Power Saving

CPU Speed

Make use of Intel SpeedStep technology to reduce power power consumption. The system will automatically adjust the CPU Speed depending on system loading.

System Throttling

Refers to a series of methods for reducing power consumption in computers by lowering the clock frequency. These APIs allow the user to lower the clock from 87.5% to 12.5%.

Software Utilities

BIOS Flash

The BIOS Flash utility allows customers to update the flash ROM BIOS version, or use it to back up current BIOS by copying it from the flash chip to a file on customers' disk. The BIOS Flash utility also provides a command line version and API for fast implementation into customized applications.

Embedded Security ID

The embedded application is the most important property of a system integrator. It contains valuable intellectual property, design knowledge and innovation, but it is easily copied! The Embedded Security ID utility provides reliable security functions for customers to secure their application data within embedded BIOS.

Monitoring

The Monitoring utility allows the customer to monitor system health, including voltage, CPU and system temperature and fan speed. These items are important to a device; if critical errors happen and are not solved immediately, permanent damage may be caused.

eSOS

The eSOS is a small OS stored in BIOS ROM. It will boot up in case of a main OS crash. It will diagnose the hardware status, and then send an e-mail to a designated administrator. The eSOS also provides remote connection: Telnet server and FTP server, allowing the administrator to rescue the system.

Flash Lock

Flash Lock is a mechanism that binds the board and CF card (SQFlash) together. The user can "Lock" SQFlash via the Flash Lock function and "Unlock" it via BIOS while booting. A locked SQFlash cannot be read by any card reader or boot from other platforms without a BIOS with the "Unlock" feature.